Installation Guide - Tubular Monolithic Entry Set Dummy

EMTEK

1. Door Prep	2. Install Entry Set
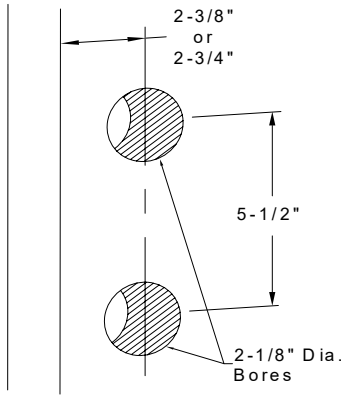	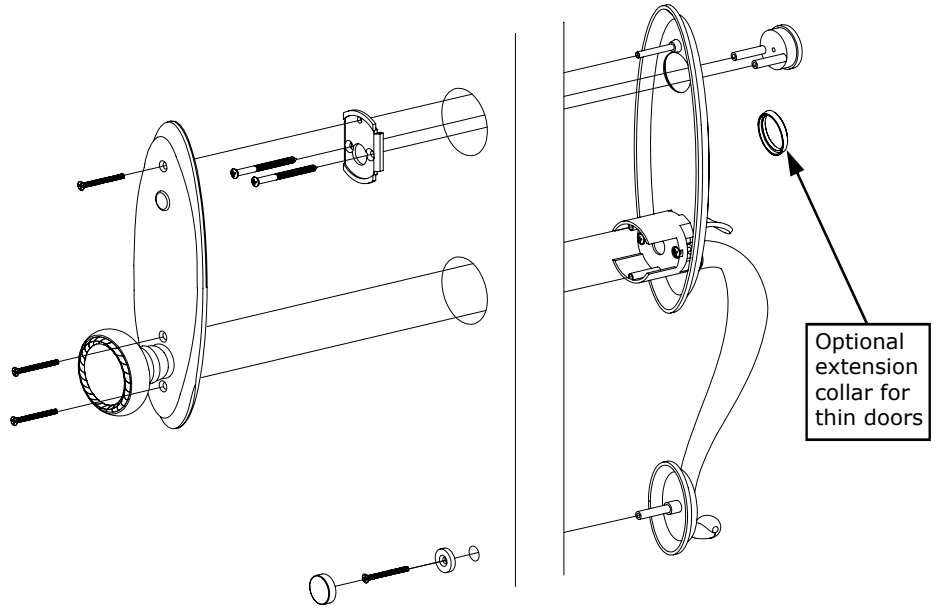

Installation Guide - Tubular Sectional Entry Set Dummy
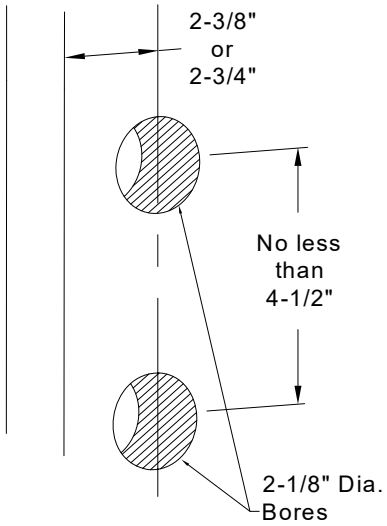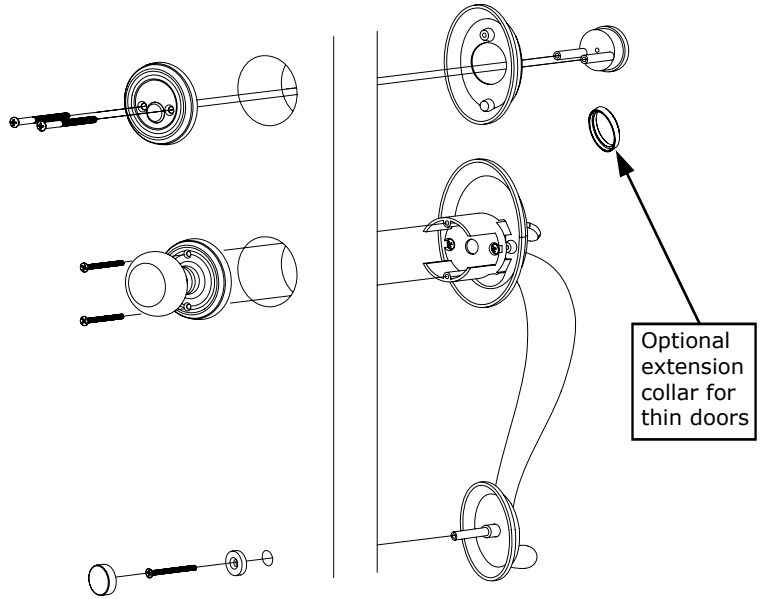
1. Door Prep	2. Install Entry Set